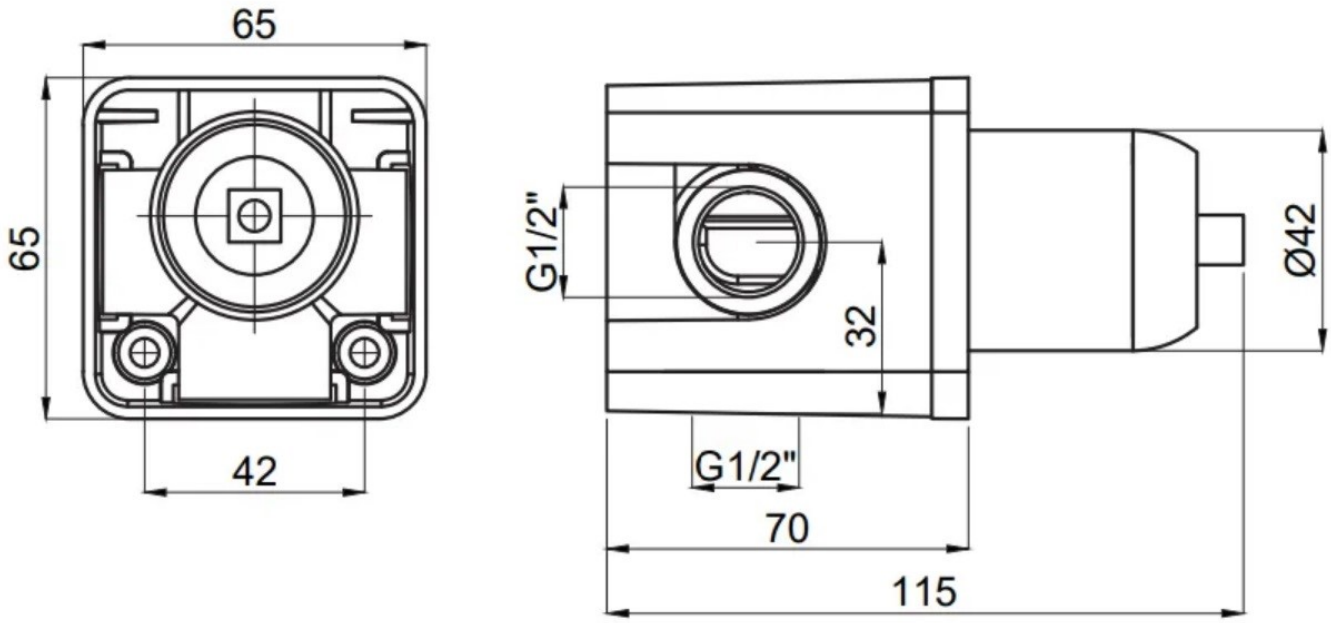
65
65
42
G1/2"
32
Ø42
G1/2"
70
115

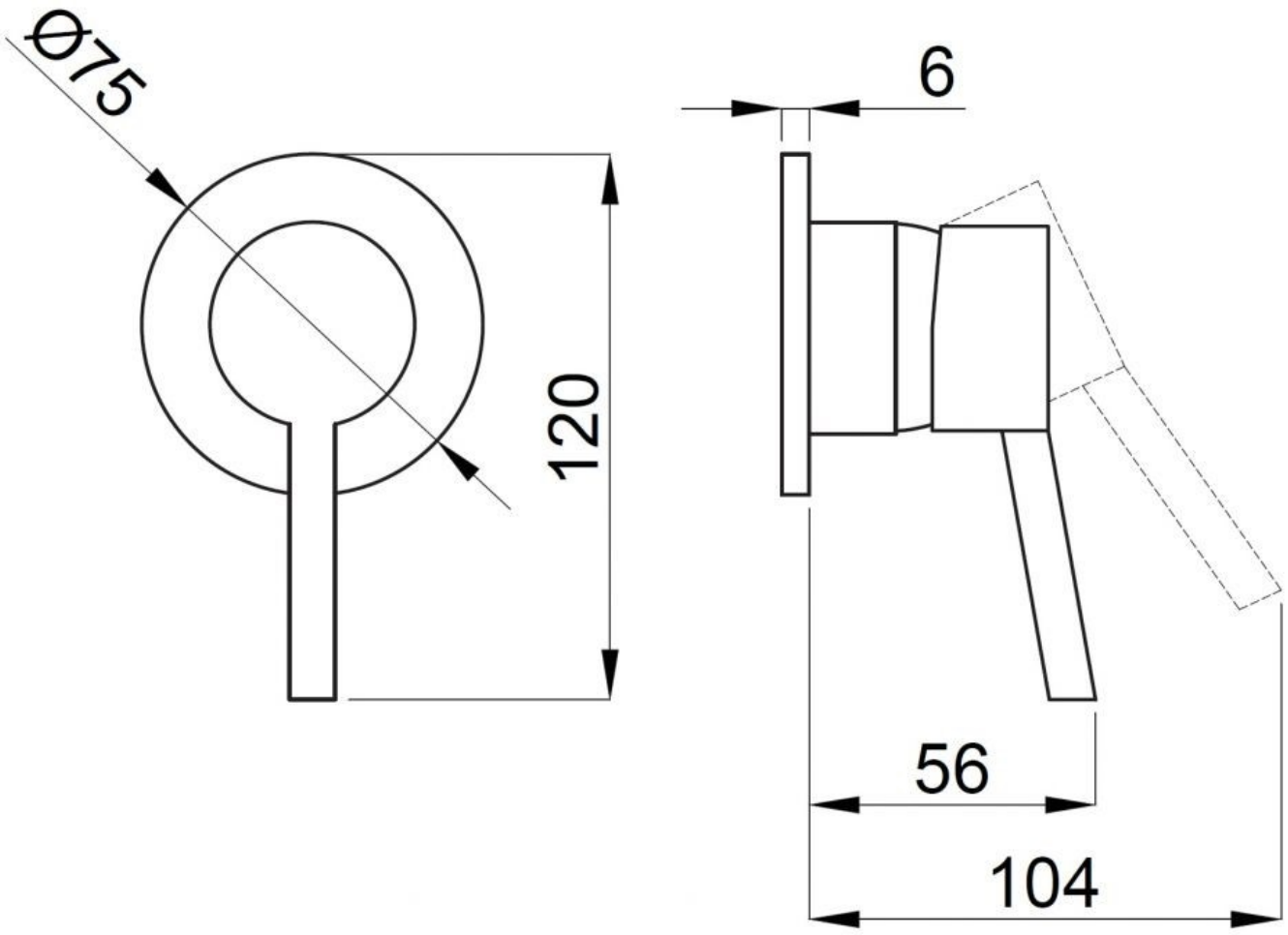
Ø75
120
6
56
104